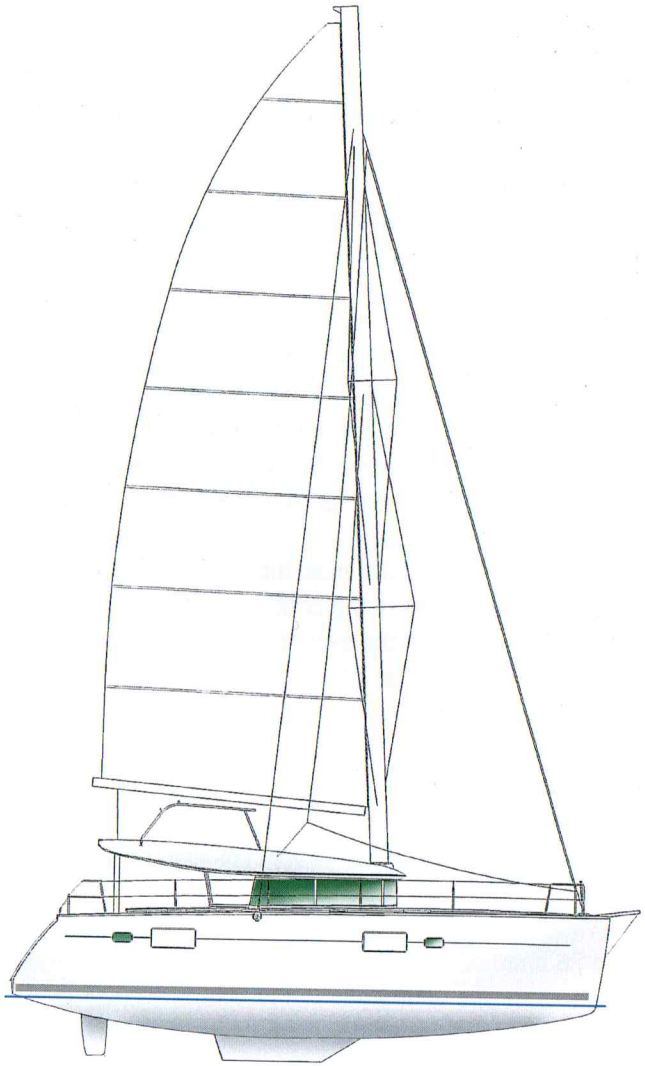

Sails

Fully battened mainsail	56 m² / 603 sq.ft
Square top mainsail (optional extra)	60,5 m² / 651 sq.ft
Furling genoa	28 m² / 301 sq.ft
Spinnaker (optional extra)	145 m² / 1561 sq.ft
Gennaker (optional extra)	70 m² / 753 sq.ft
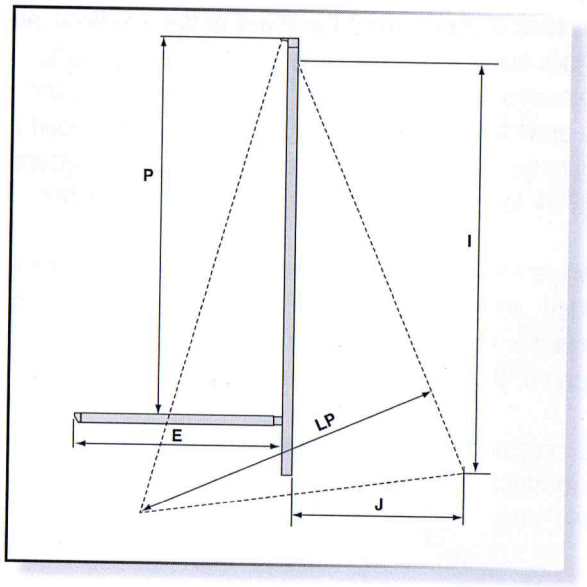
I	15,364 m / 50'39''
J	4,096 m / 13'43''
P	15,664 m / 51'38''
E	5,308 m / 17'41"