3000803 Norwin Lazy bag R0

Navy blue
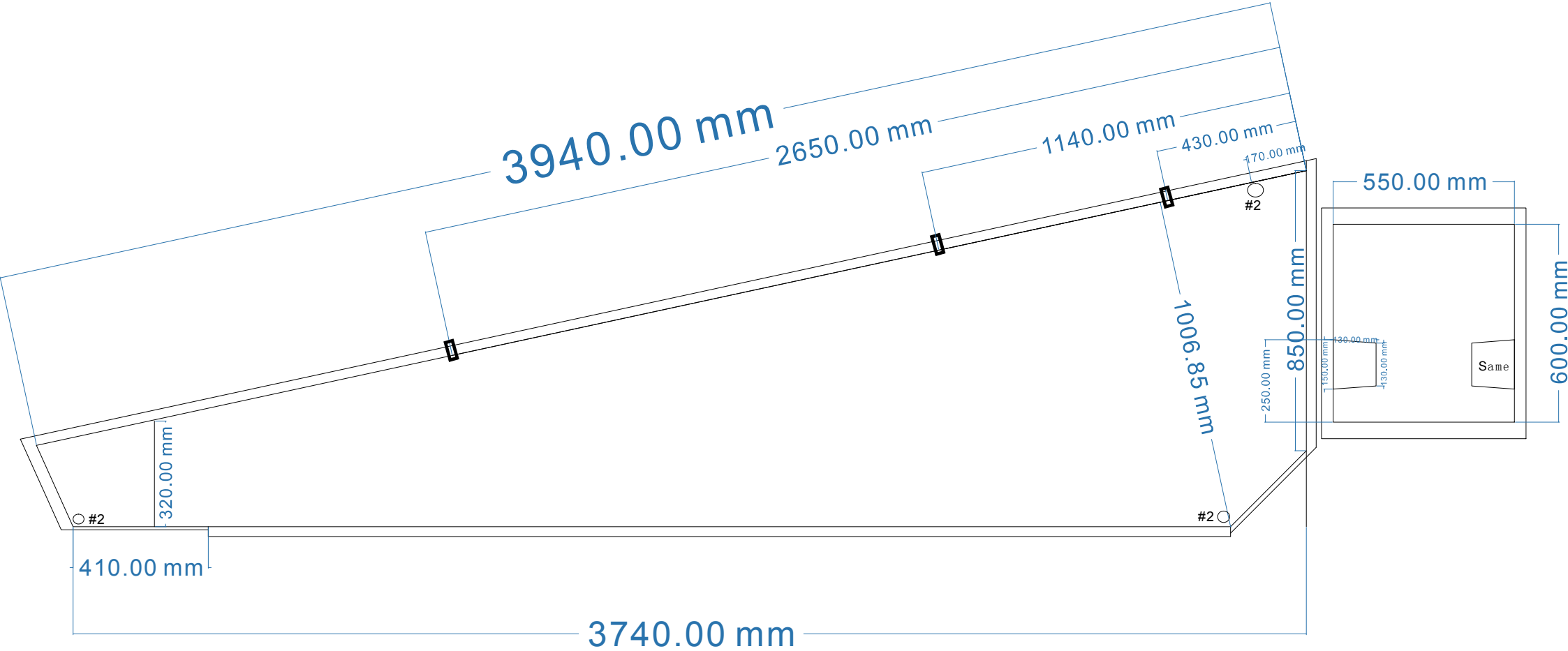
copied follow pictures of old one